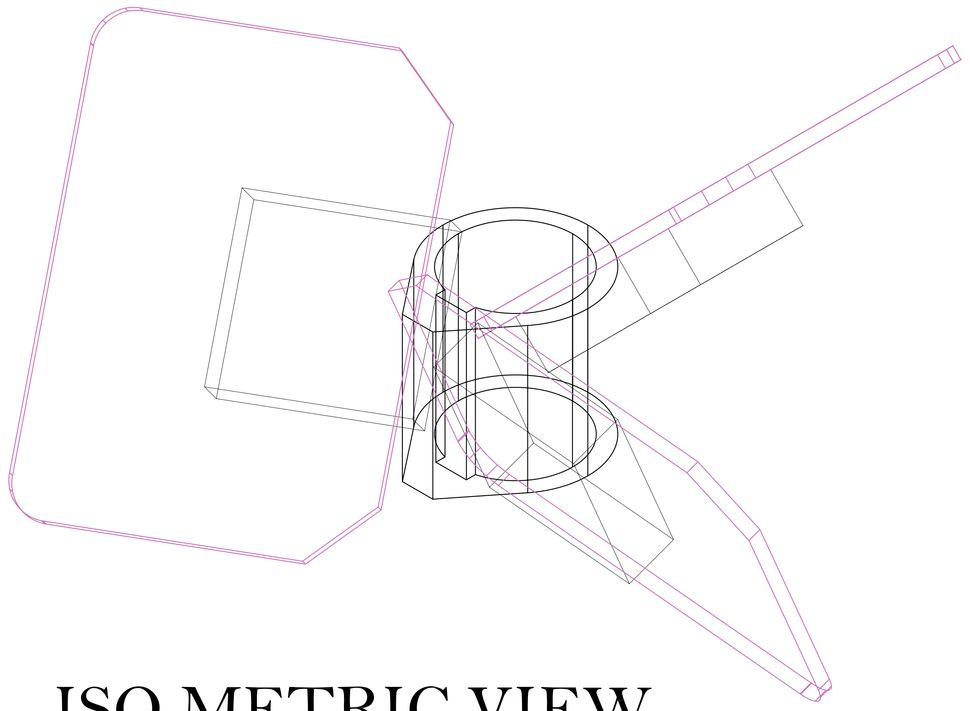

ISO METRIC VIEW

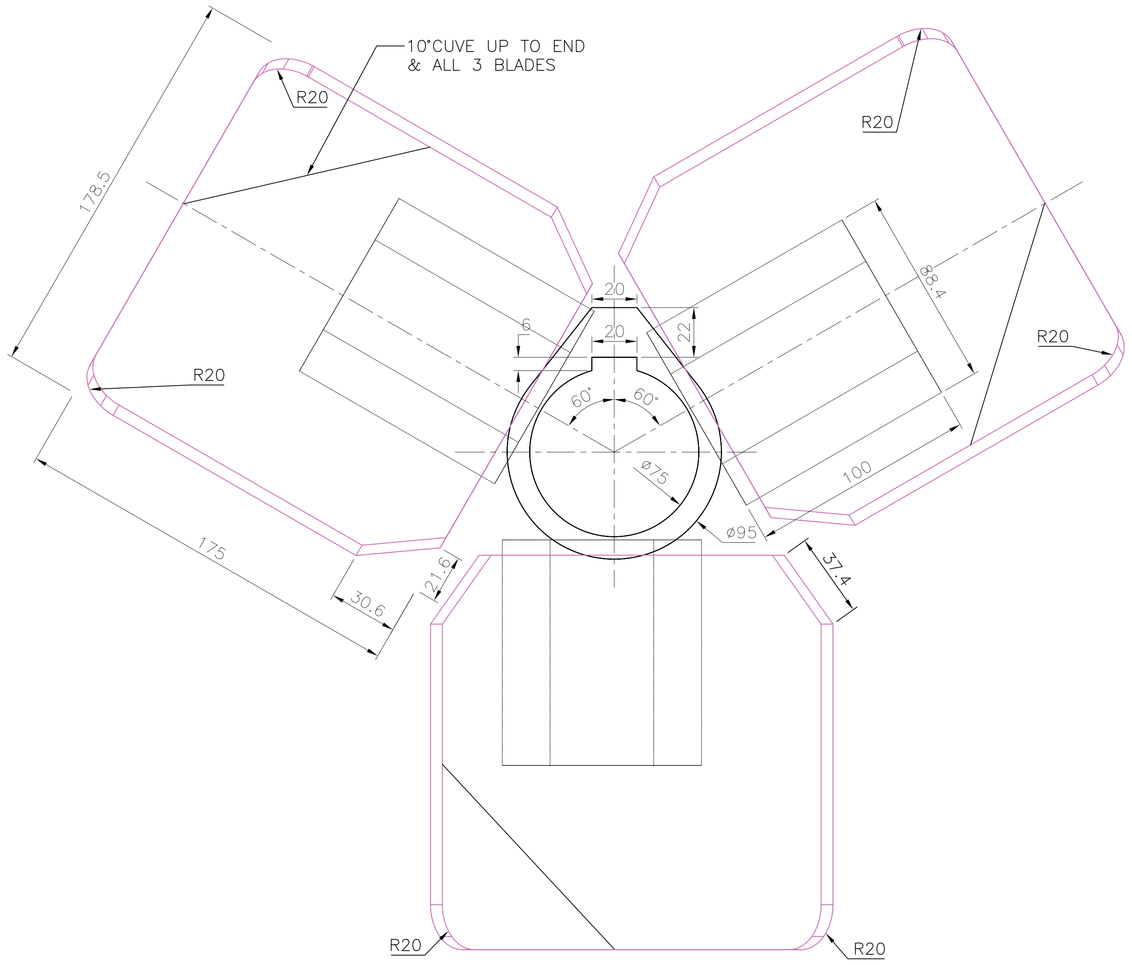

PLAN

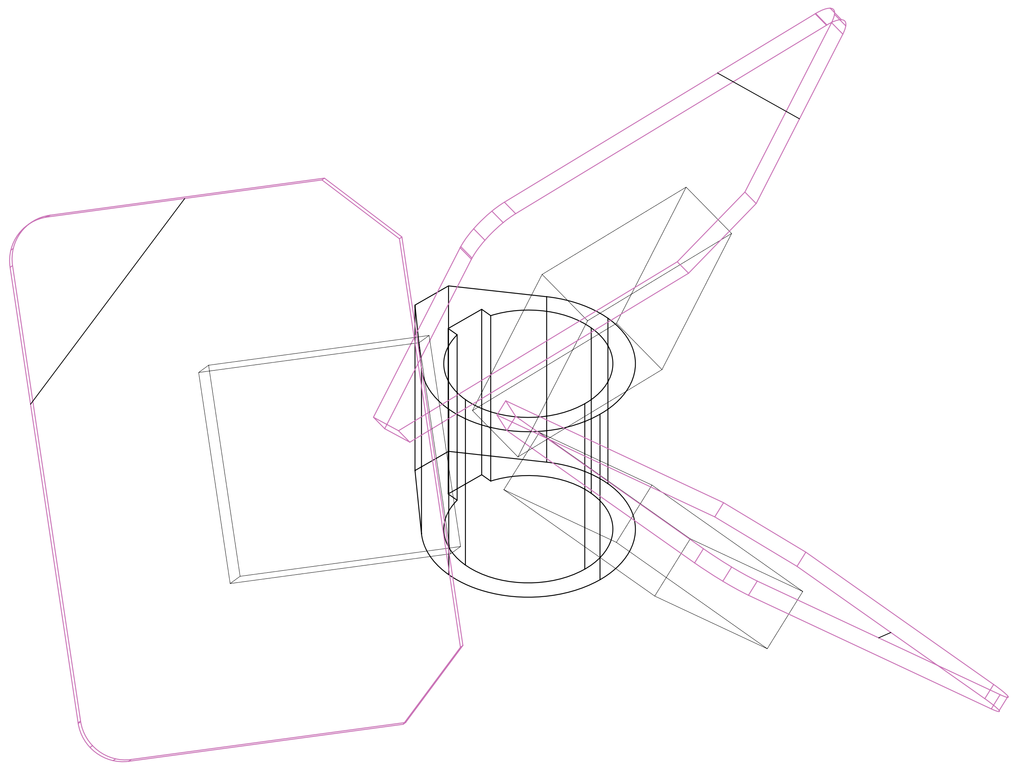

ISO METRIC VIEW

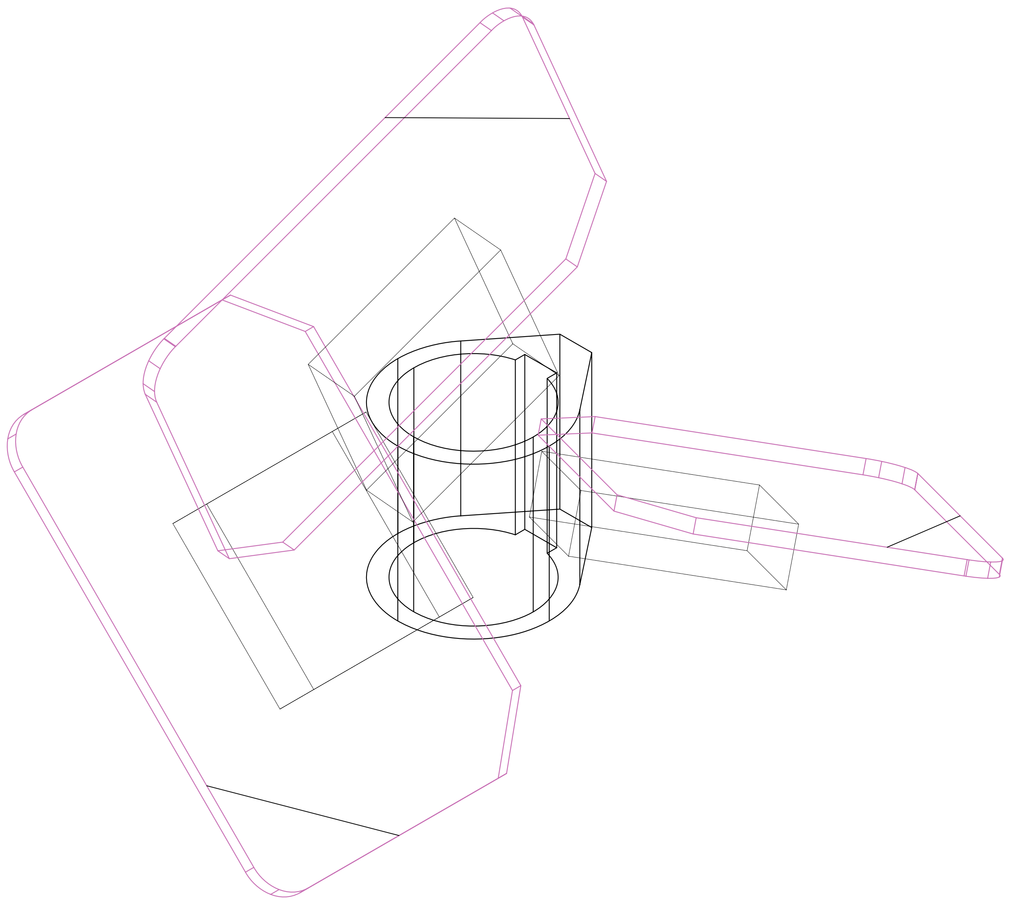

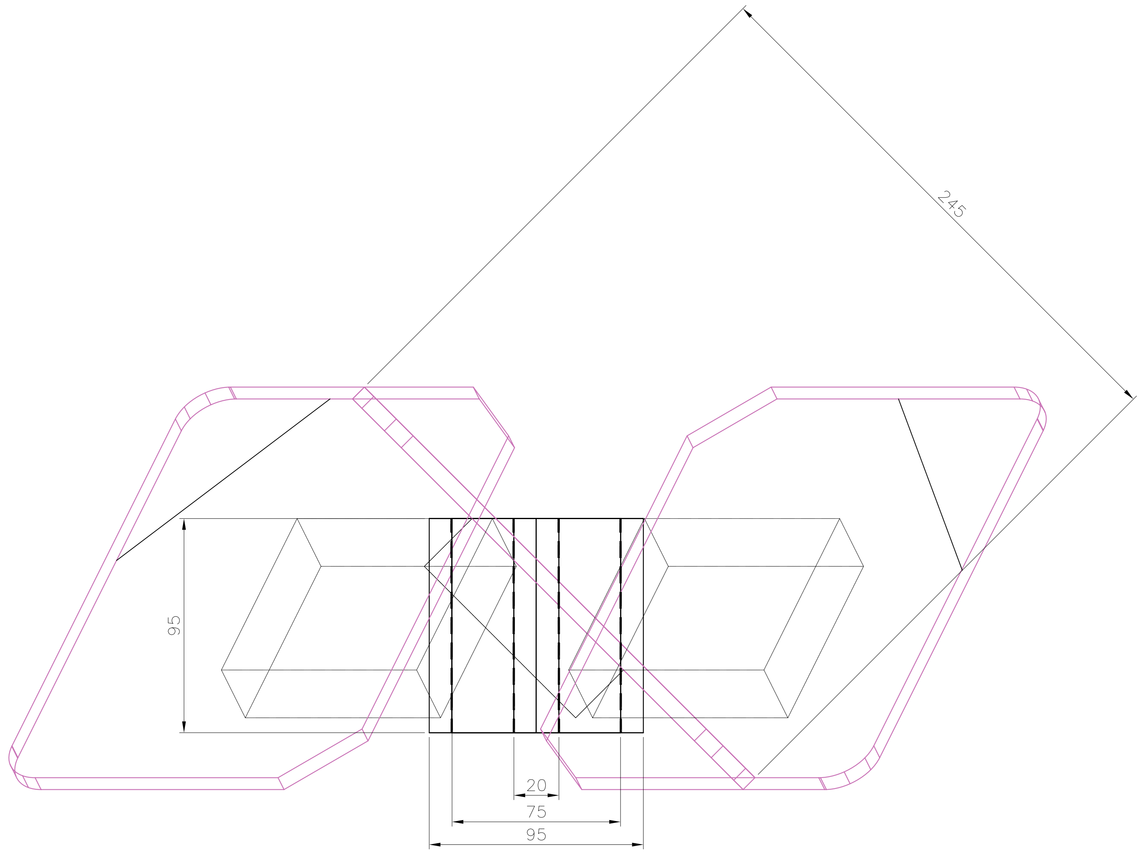

ELEVATION

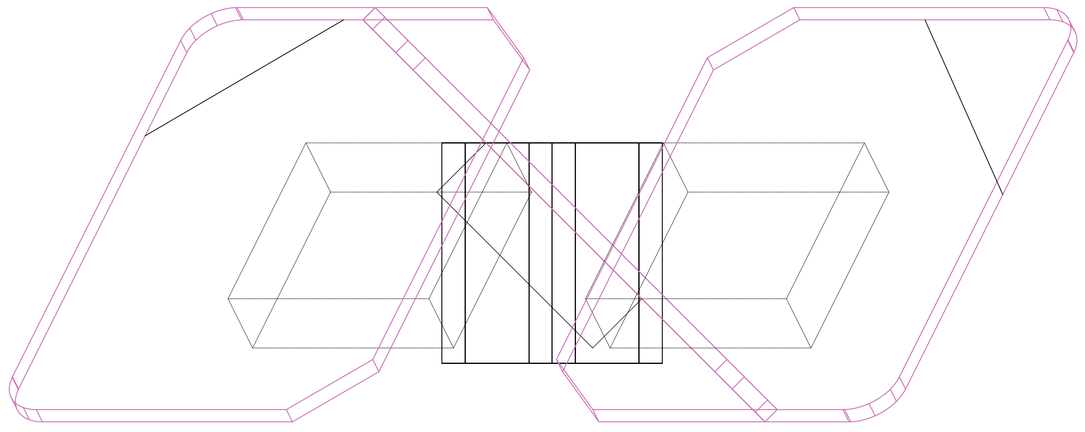

Itemref	Quantity	Title/Name, designation, material, dimension etc			Article No./Reference	
Drawn by CCS		Checked by	Approved by – date	File name	Date	Scale 1 : 1
SHROFF PROCESS PUMPS Beside Pramukh Swami Hospital, VADODARA.		Empilier				
		DRG. NO.			Edition	Sheet –

CCS : 9824353327